Design | BASINO

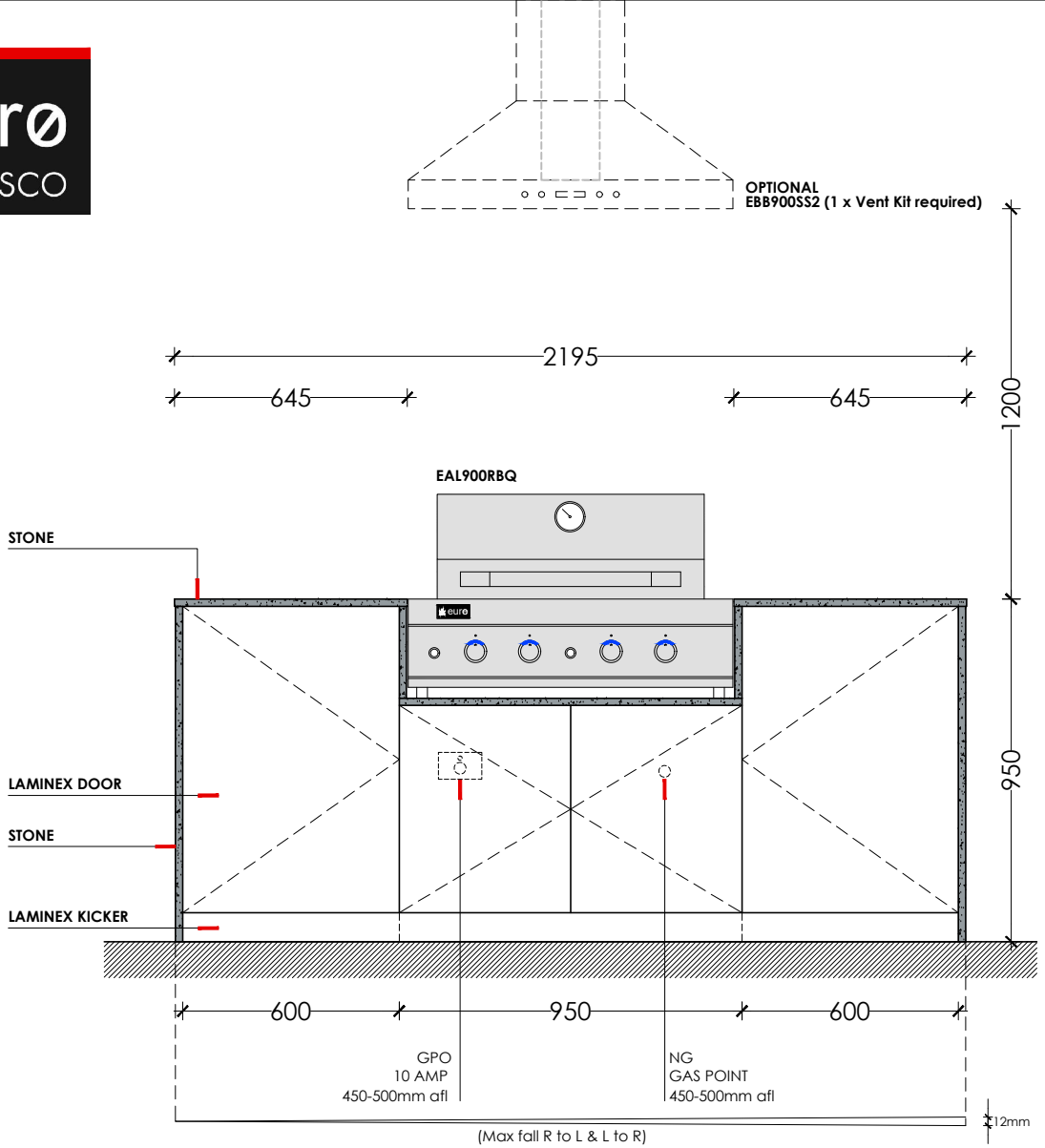

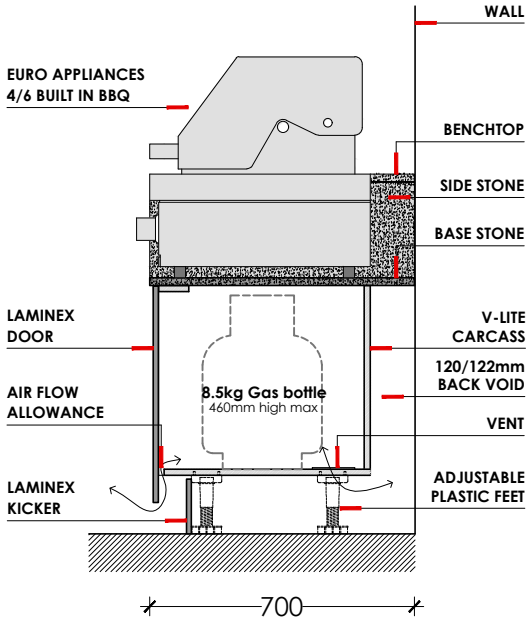

Notes :
The alfresco area must comply with your States - Gas Acts, Regulations and Standards to be able to install a Euro Alfresco kitchen.
Quoted for standard waterfall stone ends of 930mm high. It should be noted that a non-level surface will require a custom waterfall stone end to be cut, incurring an additional fee.
The service handout applies to a standard model kitchen. Services need to be changed according to your kitchen special layout. (ie. Reverse side sink& tap...etc.) Stone Depth +-700mm and Stone thickness +- 2mm.

DESIGN	OPTIONAL		APPLIANCES		CARCASS	DOORS	KICKERS	BOARD	STONE	COLOUR
BASINO	EALNGCK	NG Kit	EAL900RBQ	LPG BBQ	HN6001D	AC6001DD	AC6001DK	N/R	645	STONE
	EALPGTP	LPG Kit			HN9502DBQ	AC9502DBQD	AC9502DBQK		255 x 2	TBA
	EADC30CM	Domino Cover			HN6001D	AC6001DD	AC6001DK		950	DOOR
	ERB900SS2	ERB900SS2							645	TBA
	ERB120SS3R	Canopy							930 x 2	KICKER
	VENT KIT									TBA
SIZE										
2195mm										