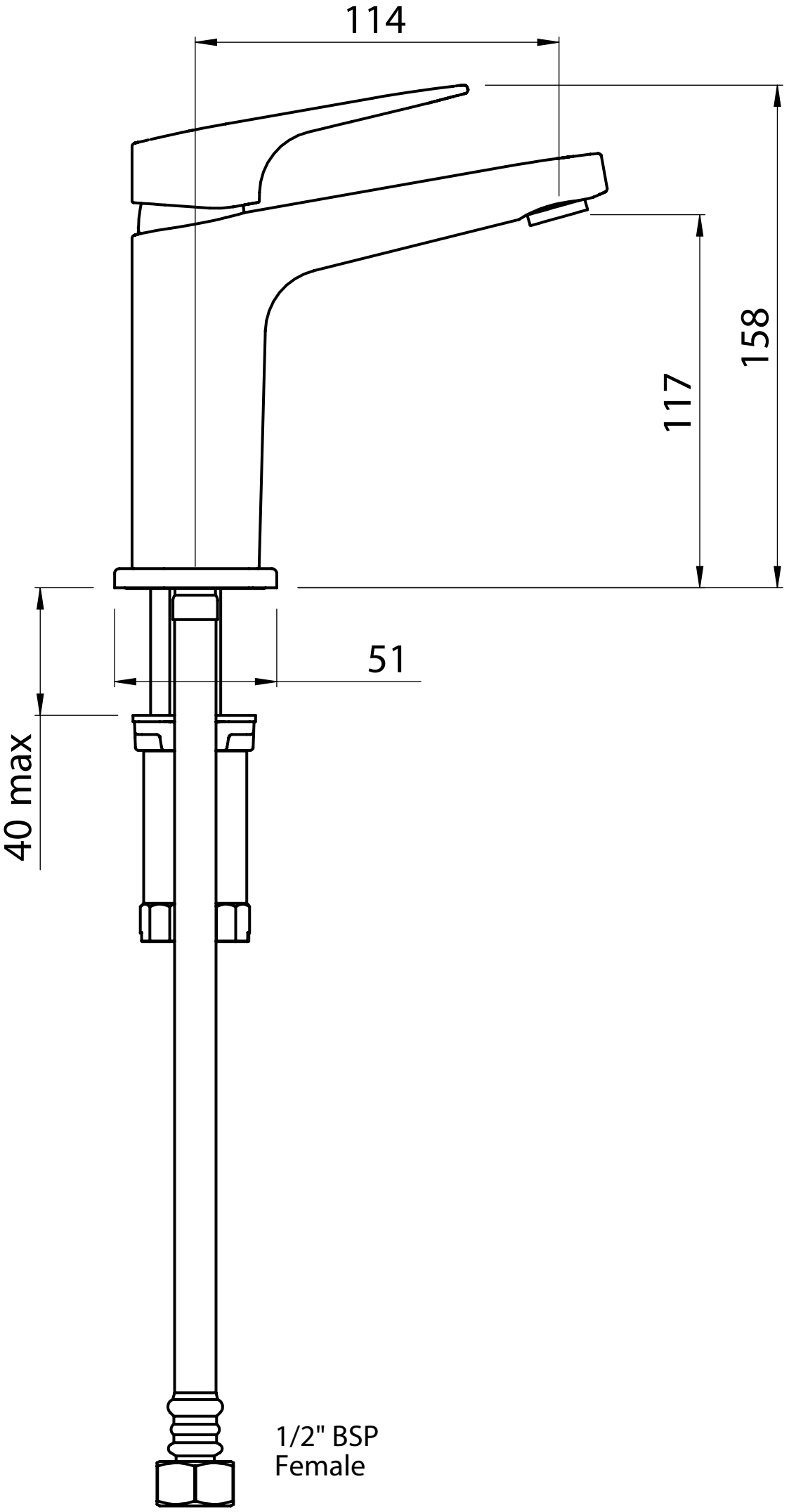
114
158
117
51
40 max
1/2" BSP
Female